# LSE02 Helicoil Spring Seal – Extended Heel

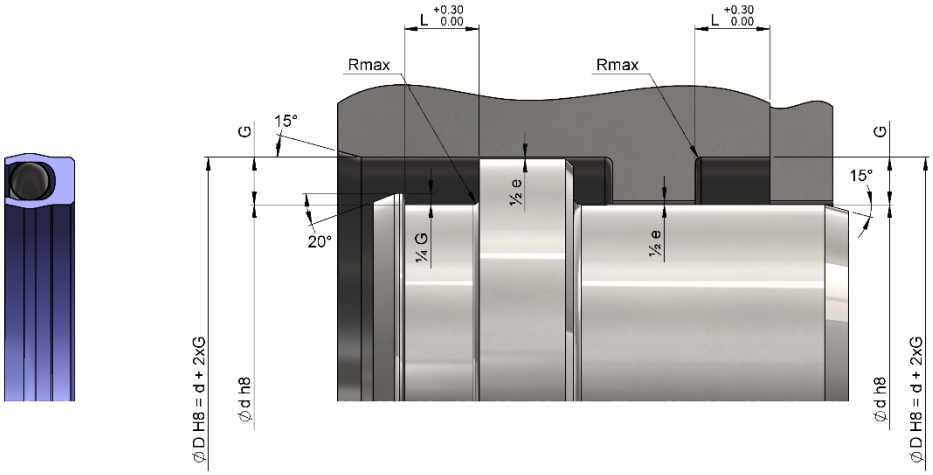


## Range of Application

**Operating Pressure** Extreme ≤1,000 bar(1)
**Operating Temperature:** -250°C to +300°C
**Sliding Speed:** ≤15m/s
**Rotating Speed:** ≤1.2m/s

1) Consult Lanson for extreme pressure applications.

## Housing Dimensions

| Cross Section | Nominal Cross section | Recommended ID Ø range | | Groove width | Groove depth | Diametral Gap | Radius max |
|---|---|---|---|---|---|---|---|
| | | d | | L | G | e | R |
| | (mm) | | | (mm) | (mm) | (mm) | (mm) |
| | | ≥ | < | | | | |
| 000 | 1.42 | 3 | 40 | 3.8 | 1.42 | 0.10 | 0.4 |
| 100 | 2.26 | 6 | 200 | 4.6 | 2.26 | 0.13 | 0.5 |
| 200 | 3.07 | 10 | 400 | 6.0 | 3.07 | 0.15 | 0.6 |
| 300 | 4.72 | 20 | 700 | 8.5 | 4.72 | 0.18 | 0.7 |
| 400 | 6.05 | 35 | 1600 | 12.1 | 6.05 | 0.20 | 0.8 |
| 500 | 9.35 | 80 | 2500 | 15.0 | 9.35 | 0.24 | 0.9 |

- Extended heel that reduces effects of extrusion.
- Helical spring for high load and small deflection range.
- Suitable for static or dynamic applications
- Can be used for both ID and OD sealing.
- Can be installed into non split grooves
- Additional sizes of machined products available.
- High chemical resistance.